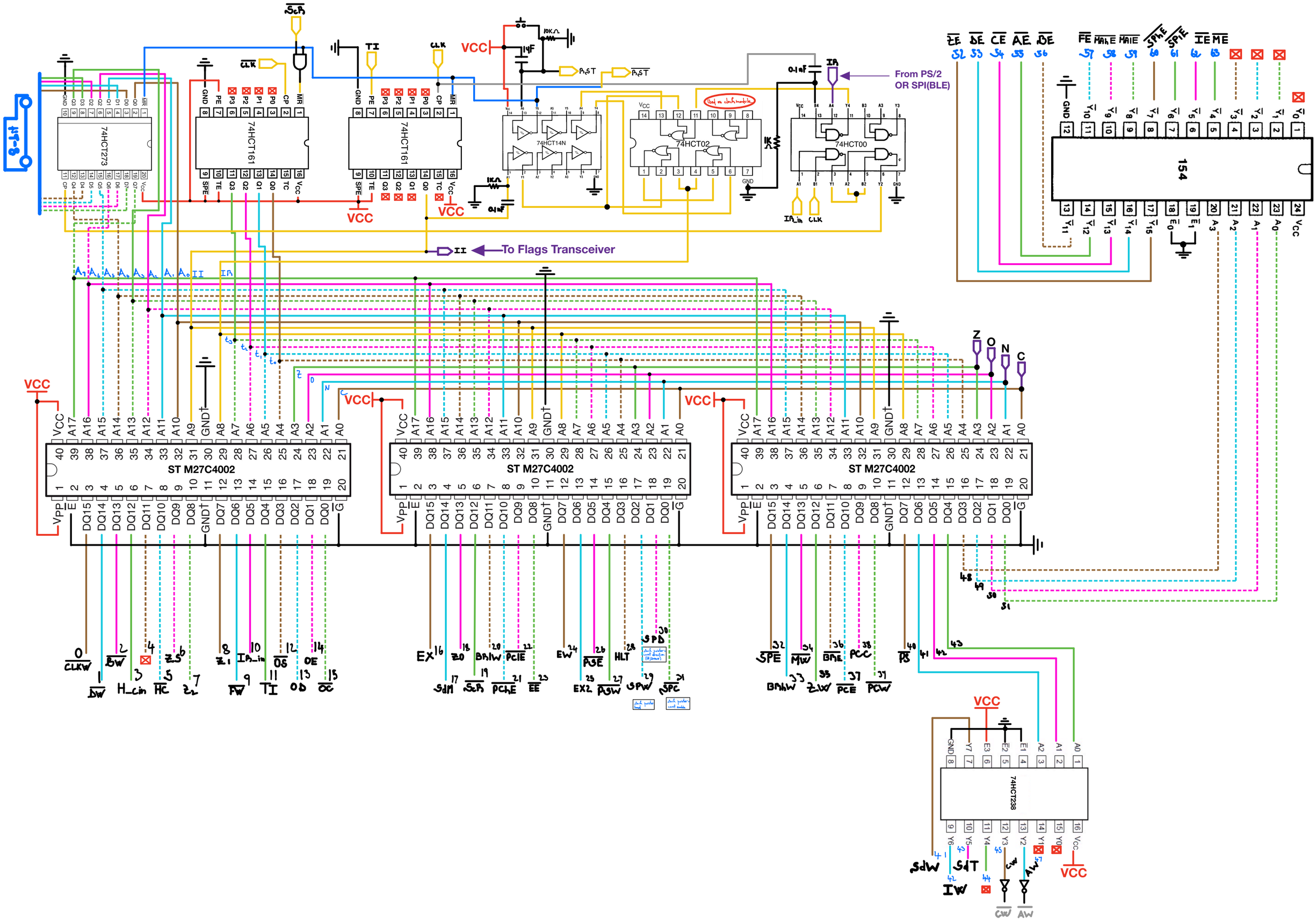
8-bit
74HCT273
74HCT161
74HCT161
74HCT14N
74HCT02
74HCT00
154
From PS/2
OR SPI(BLE)
To Flags Transceiver
VCC
ST M27C4002
ST M27C4002
ST M27C4002
74HCT238